

IP67 FEMALE RECEPTACLE

420W9W

3P+G 250vac Female Wall Mount IP67

Pictures are for reference only

Approved Globetron PCE Product

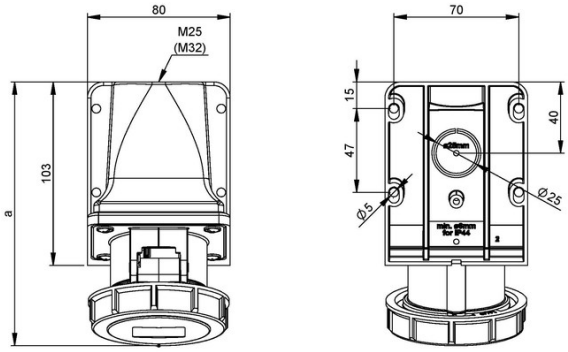

Ampere	16				32			
Pole	3	4	5	7	3	4	5	7
a [mm]	146	148	148	148	161	161	163	163
b [mm]	96	99	102	102	108	108	112	112
M [mm]	25	25	25	25	25	25	25	25

RELATED PRODUCTS



IP67 MALE PLUG
420P9W

Globetron Controls Corp.

Phone: 905-825-1335 - Email: sales@globetron.com

35 Seapark Drive, Unit 3,
St. Catharines, Ontario L2M 6S5