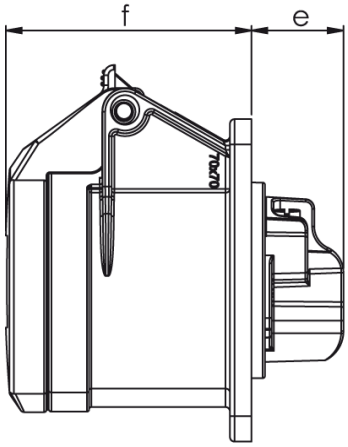

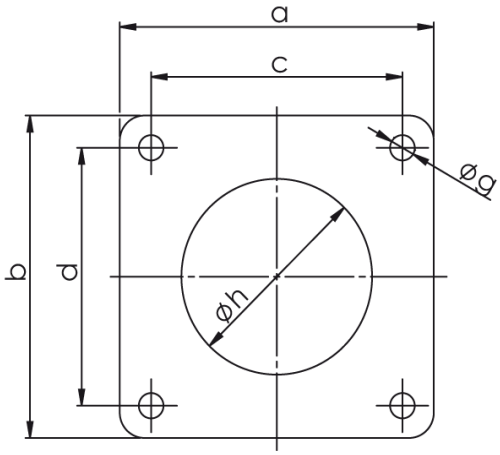

20/30A Receptacle IP44

Globetron Power Connectors are designed, built, and tested to exacting industrial standards. Our products are manufactured from PA6 which offers excellent resistance to impact as well as weathering, abrasion, and various chemicals. The contact surfaces allow high electrical conducting capacity along with high corrosion resistance. The IP44 versions of our devices are designed to withstand splashing water. Our products are built to IEC60309-1 & 2 specifications. These specifications are intended to prevent mating of devices of different voltage and amperage ratings.

-Our connectors are designed for isolation only and not for interrupting current.

- Other configurations and ratings may exist, consult the factory with any non-standard requests.

- Specifications are subject to change without notice. Although every effort has been made to insure the information presented here is accurate, errors may occur.

-Globetron's PCE product is c UL us LISTED approved

Amps	20	20	20	30	30	30
Pole	3	4	5	3	4	5
a , b	70mm	70mm	70mm	70mm	70mm	70mm
c , d	56mm	56mm	56mm	56mm	56mm	56mm
e	21mm	21mm	21mm	23mm	23mm	23mm
f	55mm	55mm	55mm	67mm	67mm	67mm
g	5.5mm	5.5mm	5.5mm	5.5mm	5.5mm	5.5mm
h	43mm	45mm	55mm	55mm	55mm	58mm
grams	113	128	150	164	181	213

Amp	Pole	110-130V 4h 1P+N+G	120/240v 12h 2P+N+G	220-250V 3P=6H 4P,5P=9H	380-415V 3P=9H 4P,5P=6H	480-500V 7H	575-600V 5H
20	3	320R4		320R6		320R7	320R5
20	4		420R12	420R9		420R7	420R5
20	5			520R9		520R7	520R5
30	3	330R4		330R6		330R7	330R5
30	4		430R12	430R9		430R7	430R5
30	5			530R9		530R7	530R5